Pieces needed for realizing a window/door, following L and H dimensions

PCS.	DESCRIPTION	CODE	H	700 1400	1401 2700	700 1400	1401 2700	700 1400	1401 2700	700 1400	1401 2700	700 1400	1401 2700	Secondary leaf
			L	360 509		510 794		795 1200		1201 1400		1401 1700		
5	Basic kit with left vertical fulcrum	3200.L												
5	Basic kit with right vertical fulcrum	3200.R												
20	Basic kit with left vertical fulcrum (without support and hinge pivot)	3200.20L												
20	Basic kit with right vertical fulcrum (without support and hinge pivot)	3200.20R												
5	Basic kit with left vertical fulcrum (without support and hinge pivot)	3200.5L												
5	Basic kit with right vertical fulcrum (without support and hinge pivot)	3200.5R												
5	Basic kit with left vertical fulcrum without support and hinge pivot (use with 3200.859)	3200.7L												
5	Basic kit with right vertical fulcrum without support and hinge pivot (to use with 3200.859)	3200.7R												
5	Left horizontal fulcrum Kit	3200.2L						1						
5	Right horizontal fulcrum Kit	3200.2R												
20	Left horizontal fulcrum Kit (without support and hinge pivot)	3200.22L												
20	Right horizontal fulcrum Kit (without support and hinge pivot)	3200.22R												
5	Left horizontal fulcrum Kit and fixed height of handle to 300 mm	3200.3L												
5	Right horizontal fulcrum Kit and fixed height of handle to 300 mm	3200.3R										1		
5	Left horizontal fulcrum Kit (without telescopic element)	3200.4L												
5	Right horizontal fulcrum Kit (without telescopic element)	3200.4R												
5	Left horizontal fulcrum Kit (without support and hinge pivot)	3200.6L												
5	Right horizontal fulcrum Kit (without support and hinge pivot)	3200.6R												
5	Left short arm	3200.750L												
5	Right short arm	3200.750R		1										
20	Left short arm	3200.770L												
20	Right short arm	3200.770R												
5	Left standard arm	3200.751L												
5	Right standard arm	3200.751R				1								
20	Left standard arm	3200.771L												
20	Right standard arm	3200.771R												
5	Left long arm	3200.752L												
5	Right long arm	3200.752R						1						
20	Left long arm	3200.772L												
20	Right long arm	3200.772R												
5	Left additional arm	3200.800L								1				
5	Right additional arm	3200.800R												
5	Non-handed hinge kit (weight capacity 110 Kg)	3200.709						1						1
20	Non-handed hinge kit (weight capacity 110 Kg)	3200.729												
5	Left reinforcement kit for hinge 3000.709 (upper part), weight capacity 140 Kg	3200.708L						1						1
5	Right reinforcement kit for hinge 3000.709 (upper part), weight capacity 140 Kg	3200.708R												
5	Non-handed hinge kit (weight capacity 170 Kg)	3200.701						1						1
20	Non-handed hinge kit (weight capacity 170 Kg)	3200.721												
5	Left bottom hinge support (weight capacity 170 Kg)	3200.700L												
5	Right bottom hinge support (weight capacity 170 Kg)	3200.700R						1						1
20	Left bottom hinge support (weight capacity 170 Kg)	3200.720L												
20	Right bottom hinge support (weight capacity 170 Kg)	3200.720R												
5	Non-handed hinge kit (weight capacity 70 Kg) for internally flush profiles	3200.740												
5	Non-handed hinge kit (weight capacity 70 Kg) for internally flush profiles with height rebate of 10 mm	3200.742												
5	Non-handed hinge kit (weight capacity 70 Kg) for internally flush profiles with 4 mm teeth	3200.745						1						1
5	LH hinge kit for internally flush profiles with height rebate of 10 mm	3200.743L												
5	RH hinge kit for internally flush profiles with height rebate of 10 mm	3200.743R												
5	Left kit for 6 closing points	3200.820L			1		1		1		1		1	
5	Right kit for 6 closing points	3200.820R												
5	Left Kit for 8 closing points	3200.825L										1		
5	Right Kit for 8 closing points	3200.825R												
5	Left lower support and pin for secondary leaf hinge (weight capacity 110-140 Kg)	3200.710L												
5	Right lower support and pin for secondary leaf hinge (weight capacity 110-140 Kg)	3200.710R												1
20	Right lower support and pin for secondary leaf hinge (weight capacity 110-140 Kg)	3200.730R												
20	Left lower support and pin for secondary leaf hinge (weight capacity 110-140 Kg)	3200.730L												
5	Hinge Kit for secondary leaf (weight capacity 80 Kg)	3200.809												
20	Hinge Kit for secondary leaf (weight capacity 80 Kg)	3200.829												1
5	Non-handed hinge kit for secondary leaf (weight capacity 70 Kg) for internally flush profiles	3200.831												
5	Like 3200.831 but for internally flush profiles with H rebate of 10 mm	3200.842												
5	Left upper support for secondary leaf hinge	3200.840L												
5	Right upper support for secondary leaf hinge	3200.840R												1
20	Left upper support for secondary leaf hinge	3200.860L												
20	Right upper support for secondary leaf hinge	3200.860R												
20	Vertical clamp bolt	3200.850 ÷ .854												
20	Vertical clamp bolt	3200.896												2
20	Lever bolt	1551.6												
10	Monolithic bolt kit for secondary leaf with vertical fulcrum (art. 3200.7L/R)	3200.859												1
20	Bi-directional bolt	1538												1
5	Corner device kit	3200.845												
200	Adjustable Keeper	1414W												
200	Adjustable Keeper	1414.1W												2
100	Double keeper	1416.5W												
40	Hinge-side supplementary closing point	1246.832W												1

APPLICATION FIELD

Casement max. weight 110 Kg.

H \ L	360	460	509	510	610	710	794	795	900	1000	1100	1200	1300	1400	1500	1600	1700
2700	•	42	37	37	29	25	22	21	19	16	15	13	12	11	10	10	9
2600	•	44	39	38	31	26	22	22	19	17	15	14	13	12	11	10	9
2500	•	46	40	40	32	27	23	23	20	18	16	15	13	12	11	11	10
2400	•	48	42	42	34	28	25	25	21	19	17	15	14	13	12	11	10
2300	•	•	44	44	35	29	26	26	22	20	18	16	15	13	12	12	11
2200	•	•	47	46	37	31	27	27	23	21	19	17	15	14	13	12	11
2100	•	•	49	49	39	33	29	29	25	22	20	18	16	15	14	12	11
2000	•	•	•	•	41	35	30	30	26	23	21	19	17	16	14	12	11
1900	•	•	•	•	44	37	32	32	28	25	22	20	18	16	14	12	11
1800	•	•	•	•	47	39	34	34	29	26	23	21	19	16	14	12	11
1700	•	•	•	•	50	41	36	36	31	28	25	23	19	16	14	12	11
1600	•	•	•	•	•	44	39	39	34	30	27	23	19	16	14	12	11
1500	•	•	•	•	•	48	42	42	36	32	28	23	20	16	14	12	10
1400	•	•	•	•	•	•	45	45	39	35	28	23	20	16	14	12	10
1300	•	•	•	•	•	•	49	49	42	35	29	23	20	16	14	12	9
1200	•	•	•	•	•	•	•	•	45	35	29	24	20	16	13	10	7
1100	•	•	•	•	•	•	•	•	45	36	29	24	20	15	11	7	5
1000	•	•	•	•	•	•	•	•	45	36	29	24	17	12	8	5	X
900	•	•	•	•	•	•	•	•	46	36	28	19	13	8	4	X	X
800	•	•	•	•	•	•	•	•	46	34	22	13	7	X	X	X	X
700	•	•	•	•	•	•	•	•	41	25	14	6	X	X	X	X	X

Casement max. weight 140 Kg.

H \ L	360	460	509	510	610	710	794	795	900	1000	1100	1200	1300	1400	1500	1600	1700
2700	•	•	48	48	39	32	28	28	24	22	19	18	16	15	14	13	12
2600	•	•	•	•	40	34	29	29	25	23	20	18	17	15	14	13	12
2500	•	•	•	•	42	35	31	31	27	24	21	19	17	16	15	14	13
2400	•	•	•	•	44	37	32	32	28	25	22	20	18	17	16	15	14
2300	•	•	•	•	46	38	34	34	29	26	23	21	19	18	16	15	14
2200	•	•	•	•	48	40	35	35	31	27	24	22	20	19	17	16	15
2100	•	•	•	•	•	42	37	37	32	29	26	23	21	20	18	17	16
2000	•	•	•	•	•	45	39	39	34	30	27	25	22	21	19	18	17
1900	•	•	•	•	•	47	42	42	36	32	29	26	24	22	20	19	17
1800	•	•	•	•	•	•	44	44	38	34	30	28	25	23	21	19	17
1700	•	•	•	•	•	•	47	47	41	36	32	29	27	25	22	19	17
1600	•	•	•	•	•	•	•	•	44	39	35	31	29	26	22	19	17
1500	•	•	•	•	•	•	•	•	47	42	37	34	31	26	22	19	17
1400	•	•	•	•	•	•	•	•	•	45	40	36	31	26	22	19	17
1300	•	•	•	•	•	•	•	•	•	49	44	37	31	26	22	19	17
1200	•	•	•	•	•	•	•	•	•	•	45	37	31	26	22	19	17
1100	•	•	•	•	•	•	•	•	•	•	45	37	31	26	22	18	14
1000	•	•	•	•	•	•	•	•	•	•	45	37	31	26	20	16	12
900	•	•	•	•	•	•	•	•	•	•	45	37	30	23	17	12	9
800	•	•	•	•	•	•	•	•	•	•	46	34	25	18	12	8	5
700	•	•	•	•	•	•	•	•	•	•	39	27	18	11	6	X	X

Casement max. weight 170 Kg.

H \ L	360	460	509	510	610	710	794	795	900	1000	1100	1200	1300	1400	1500	1600	1700
2700	•	•	•	•	48	40	35	35	30	27	24	22	20	18	17	16	15
2600	•	•	•	•	50	41	36	36	31	28	25	23	21	19	18	16	15
2500	•	•	•	•	•	43	38	38	33	29	26	24	22	20	18	17	16
2400	•	•	•	•	•	45	40	40	34	30	27	25	23	21	19	18	17
2300	•	•	•	•	•	47	42	41	36	32	29	26	24	22	20	19	17
2200	•	•	•	•	•	50	44	44	38	33	30	27	25	23	21	19	17
2100	•	•	•	•	•	•	46	46	40	35	32	29	26	24	22	19	17
2000	•	•	•	•	•	•	48	48	42	37	33	30	28	25	22	19	17
1900	•	•	•	•	•	•	•	•	44	39	35	32	29	26	22	19	17
1800	•	•	•	•	•	•	•	•	47	42	37	34	30	26	22	19	17
1700	•	•	•	•	•	•	•	•	•	44	40	36	30	26	22	19	17
1600	•	•	•	•	•	•	•	•	•	48	43	36	30	26	22	19	17
1500	•	•	•	•	•	•	•	•	•	•	44	36	31	26	22	19	17
1400	•	•	•	•	•	•	•	•	•	•	44	36	31	26	22	19	17
1300	•	•	•	•	•	•	•	•	•	•	44	37	31	26	22	19	17
1200	•	•	•	•	•	•	•	•	•	•	45	37	31	26	22	19	17
1100	•	•	•	•	•	•	•	•	•	•	45	37	31	26	22	18	14
1000	•	•	•	•	•	•	•	•	•	•	45	37	31	26	20	16	12
900	•	•	•	•	•	•	•	•	•	•	45	37	30	23	17	12	9
800	•	•	•	•	•	•	•	•	•	•	46	34	25	18	12	8	5
700	•	•	•	•	•	•	•	•	•	•	39	27	18	11	6	X	X

Casement max. weight 70 Kg (for internally flush profiles)

H \ L	360	400	500	600	700	800	900	1000	1100	1200	1300	1400	1500
2700	37	31	23	18	15	13	11	10	9	8	7	6	6
2600	39	32	24	19	16	13	11	10	9	8	7	7	6
2500	40	34	25	20	16	14	12	11	9	8	8	7	6
2400	42	35	26	21	17	15	13	11	10	9	8	7	7
2300	45	37	29	22	18	15	13	12	10	9	8	8	7
2200	47	39	29	23	19	16	14	12	11	10	9	8	8
2100	•	41	31	24	20	17	15	13	12	10	9	9	8
2000	•	44	32	26	21	18	16	14	12	11	10	9	8
1900	•	46	34	27	23	19	17	15	13	12	11	10	9
1800	•	49	37	29	24	20	18	16	14	13	11	10	10
1700	•	•	39	31	26	22	19	17	15	13	12	11	10
1600	•	•	42	33	28	23	20	18	16	14	13	12	11
1500	•	•	45	36	30	25	22	19	17	16	14	13	12
1400	•	•	45	36	30	25	22	19	17	16	14	13	12
1300	•	•	•	42	35	30	26	23	20	18	17	15	14
1200	•	•	•	47	38	33	28	25	22	20	18	17	13
1100	•	•	•	•	43	36	32	28	25	22	20	15	11
1000	•	•	•	•	48	41	35	31	28	24	17	12	8
900	•	•	•	•	•	46	40	35	28	19	13	8	4
800	•	•	•	•	•	•	46	34	22	14	8	3	X
700	•	•	•	•	•	•	41	25	14	6	X	X	X
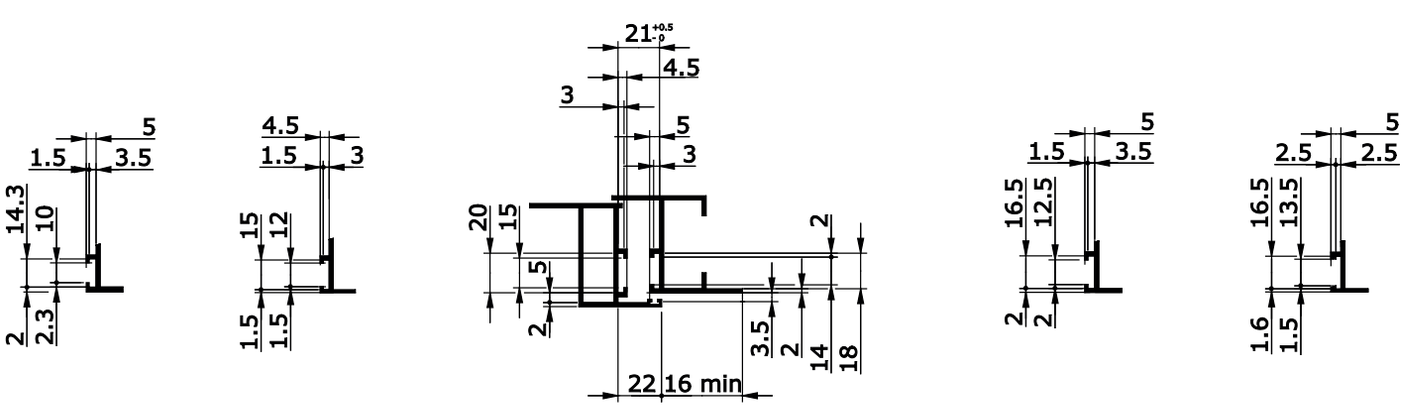
• Feasible with max. glass thickness of mm. 50
46: feasible with max. glass thickness indicated (ex. mm. 46)
X: Not feasible
NOTE: glass thickness refers to the thickness of the materials without air space